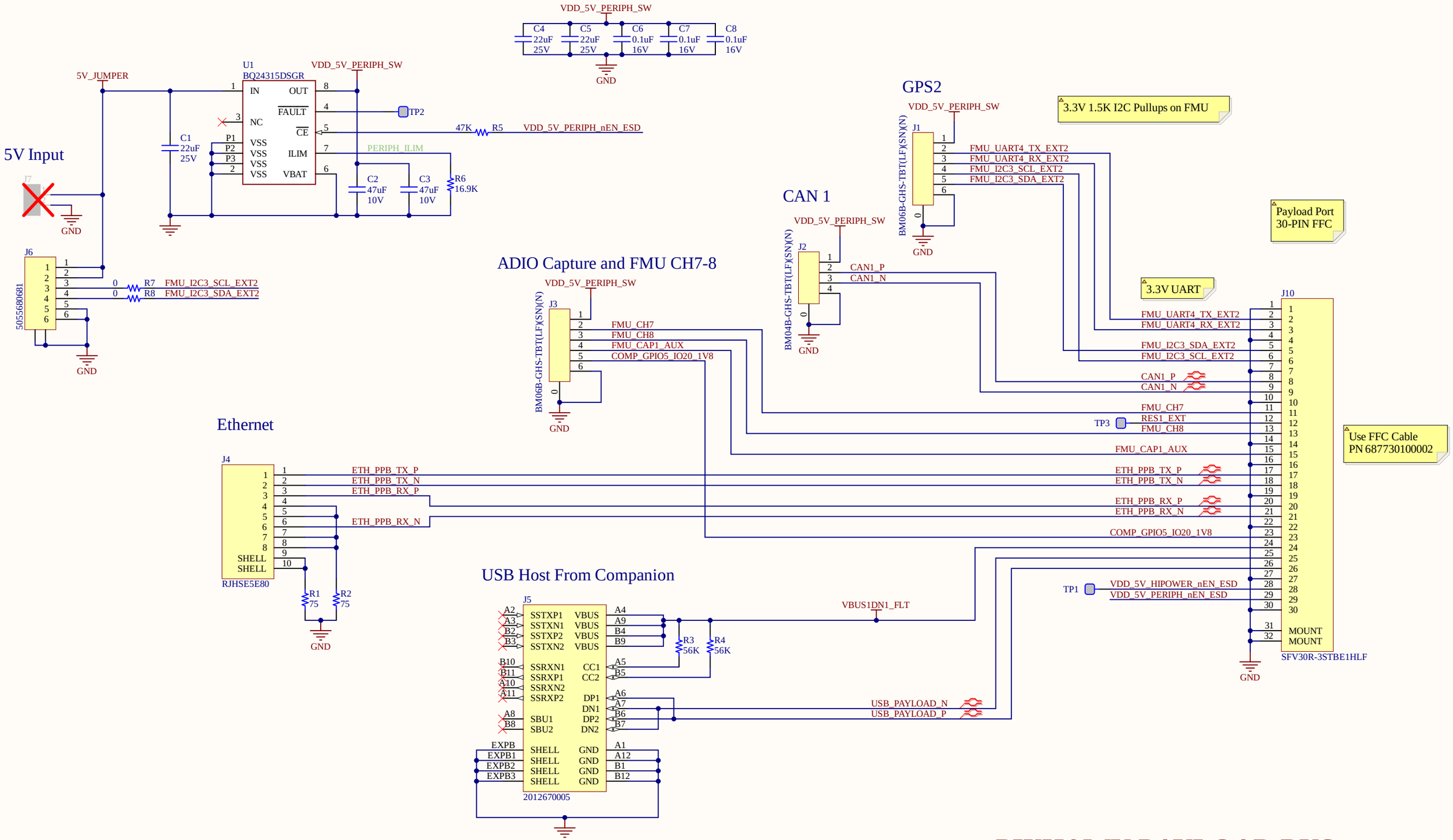


# PIXHAWK PAYLOAD BUS

| | | | |
|---|---|---|---|
| Title | *Pixhawk Payload Bus Breakout* | | *Auterion* *Giesshuebelstrasse 40* *8045 Zurich, Switzerland* |
| Size: B | Number: ? | Rev: 3 | Author: Alex Klimaj |
| Date: 5/26/2020 | Sheet 1 of 1 | | Checked: Dugan Yoon |
| File: skynode_v2_ppb_breakout.SchDoc | | | |

Auterion